SIGNAL PROCESSING FOR PARTIAL DISCHARGE PULSE DETECTION USING WAVELET ANALYSIS

S.Matsumoto*, Y.Shibuya and R.Ogura
[1]Shibaura Institute of Technology, 3-7-5 Toyosu Koto-ku, Japan
*Email: matu0704@sic.shibaura-it.ac.jp

Abstract: Partial discharge (PD) measurements are very important in diagnosing problems with power equipment insulation and are promising in high-voltage testing. However, PD signal is weak and has low energy. Therefore a clear discrimination between a PD signal and external noise is very difficult in the actual fields. This paper examines wavelet analysis using the odd function as the mother wavelet to detect the PD pulses. Namely, mother wavelet using odd functions was studied and compared with experimental data to distinguish the PD signal and external noise. The proposed algorithm has many advantages and has led to successful PD diagnoses.

INTRODUCTION

A partial discharge (PD) signal consists of wide-band frequencies and complicated waveforms because the PD phenomena are very complex and external noise is superposed on PD signals. This means that there are many parameters for the determination of actual PD pulse waveforms, and precise measurement requires larger memories of the measuring instrument. Then, the automatic signal processing technique requires more automatic diagnostic algorithms in the high-voltage PD test. It is well known that wavelet analysis has many advantages such as detection of discontinuous signal, detection of similarity for correlation and data handling, and so on. However, there has been no study that tried to analyze PD signal using the wavelet analysis. This paper deals with wavelet analysis using the odd function as the mother wavelet and proposes digital filtering to eliminate the external noise such as inverter switching noises or broadcasting wave noises. The proposed method has many possibilities to discriminate the actual PD signal from the noisy background, and will be a powerful tool to insulation diagnoses.

WAVELET ANALYSIS

The continuous wavelet transform (CWT) is defined by

$$(W_\psi f)(b,a) = \frac{1}{\sqrt{a}} \int_{-\infty}^{\infty} \overline{\psi}\left(\frac{t-b}{a}\right) f(t)dt \qquad (1)$$

where, $f(t)$ is a continuous signal function and ψ is the daughter wavelet defined by

$$\psi_{a,b}(t) = \frac{1}{\sqrt{a}} \psi\left(\frac{t-b}{a}\right) \qquad (2)$$

This waveform is scaled and translated to match the input signal. The scale parameter "*a*" and the shift parameter "*b*" are appropriately decided, and a local character of the signal is examined. As a result, it is possible to select specify time domain. As a result, it is easy to extract discontinuity signal.

The discrete wavelet transformation (DWT) for a discrete observation function $f(x)$ is given by

$$D(k,j) = d_k^{(j)} = 2^j \int_{-\infty}^{\infty} \overline{\psi}\left(2^j x - k\right) f(x)dx \qquad (3)$$

The admissible condition for mother wavelet in the Fourier transform is given by

$$\int_{-\infty}^{+\infty} \frac{\left|\hat{\psi}(\omega)\right|^2}{|\omega|} d\omega < \infty \qquad (4)$$

Under the admissible condition, it is possible to calculate the inverse wavelet. However, wavelet analysis substitutes compact support for the admissible condition as follows:

$$\int_{-\infty}^{+\infty} \psi(x)dx = 0 \qquad (5)$$

This means that the mother wavelet $\psi(x)$ oscillates, and odd functions satisfy this condition.

Over the past few decades, many studies have been made on wavelet. For example;

1) Real wavelet
   - Haar wavelet
   - Daubechies wavelet (1988)
   - Meyer wavelet (1992)
   - Biorthogonality wavelet
   - Coiflet wavelet
   - Symlet wavelet
   - Morlet wavelet(1982)
   - Mexican hat wavelet
   - Reverse biorthogonality wavelet
   - Gaussian derivatives family wavelet
   - FIR-based approximation of Meyer wavelet

2) Complex wavelet
   - Gaussian derivatives
   - Morlet wavelet
   - Frequency B-spline wavelet
   - Shannon wavelet

Although numerous attempts have been made to study the signal processing, mother wavelet for PD signal itself is still controversial.

PROPOSAL OF MOTHER WAVELET USING THE ODD FUNCTION

There seems to be no established theory to explain the correlation between mother wavelet and single PD signal mentioned above. This paper proposes to use the odd function for wavelet analysis as follows;

a) Gaussian function and its derivative

$$\phi(t)=\frac{1}{\sqrt{2\pi}}\exp\left(-\frac{t^2}{2}\right) \tag{6}$$

$$\psi_{a,b}(t)=\frac{b-t}{\sqrt{2\pi}a^3}e\left\{-\frac{1}{2}\left(\frac{t-b}{a}\right)^2\right\} \tag{7}$$

b) Weibull function

$$\psi_{a,b}(t,m)=-\psi_{a,b}(-t,m)$$

$$=\frac{m}{a}\left(\frac{t-b}{a}\right)^{m-1}e^{-\left(\frac{t-b}{a}\right)^m},\quad t\geq b \tag{8}$$

$$\psi_{a,b}(t,m)=0,\qquad t<b$$

c) Impulse function

Impulse function is the sum of two exponential functions as follows:

$$\psi_{a,b}(t)=-\psi_{a,b}(-t)=\frac{1}{a}\left\{\alpha e^{-\alpha\left(\frac{t-b}{a}\right)}-\beta e^{-\beta\left(\frac{t-b}{a}\right)}\right\} \tag{9}$$

d) Exponential function

$$\psi_{a,b}(t)=-\psi_{a,b}(-t)=\frac{\alpha}{a}e^{-\alpha\left(\frac{t-b}{a}\right)} \tag{10}$$

Those functions are shown in figures 1 and 2 respectively.

EXPERIMENTAL

Figure 3 shows the PD signal detection and the measuring system using the loop antenna. All experimental apparatus are installed in a room, 54 m in length, 8.4 m in width, and 4.1 m in height.

The loop antenna has a single turn coil and its diameter is 650 mm.

The ring coil consists of lead wire covered with non-magnetic conducting material such as a copper pipe to avoid electrostatic interference. Therefore, each coil detects the high-frequency electromagnetic wave signals according to Faraday's law for their respective axis of the loop antenna coil. An induced voltage $E(t)$ is given as follows:

$$E(t)=n\frac{d\phi}{dt}=n\mu_0 S\frac{dH}{dt} \tag{11}$$

This equation indicates that the induced voltage is proportional to the products of coil turn(s) n, area of loop antenna S, and time derivative of magnetic field H. This means that higher gain is obtained in a higher frequency band.

A PD signal is generated by the brass needle–needle air gap. The gap length is 10 mm. The air gap is right in the center of the room. AC 50 Hz high voltage is applied to the gaps through a one MΩ resistor by a 15 kV/100 V neon transformer. The loop antennas were located on the center line of the hall. The distance between the PD source and the loop antennas is 8.2 m. A high-frequency current transformer is used to detect the PD pulse passed through the ground-wire of the high-voltage transformer. The synchronized signals are measured by a digital oscilloscope combined with a personal computer. The length of the coaxial cable (Z_0= 50 Ω) is 10 m.

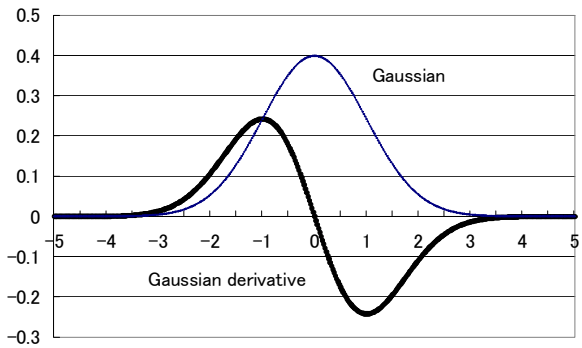

Figure 1: Gaussian function and Gaussian derivative

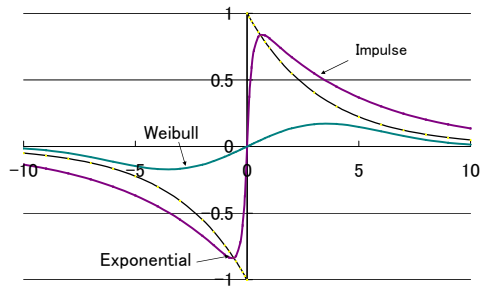

Figure 2: Example of mother wavelet composed of odd functions
(Exponential function parameter: α=0.3,
Impulse wave parameters: α=0.2, β=2
Weibull distribution parameters: m=2, a=5)

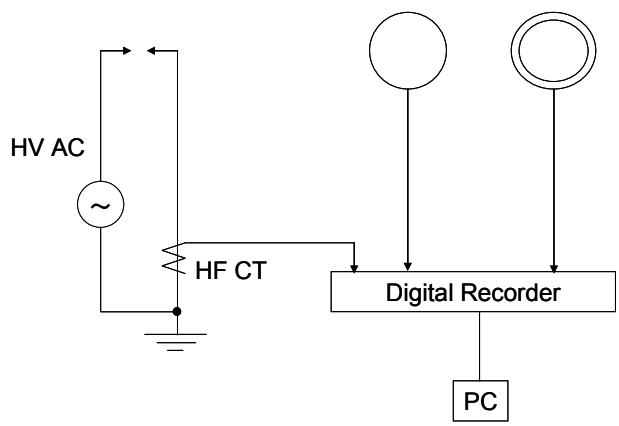

Figure 3: PD measurement system and loop antennas

Fig.4 shows experimental setup using the three different kinds of PD sources. First PD source consists of needle to needle electrodes applying AC voltage using the neon transformer. Second PD source consists of the needle to plane electrodes using AC 200kV testing transformer. Other pulses were generated by the three-phase inverter connected to induction motor. Those signals were detected by the electric field sensor.

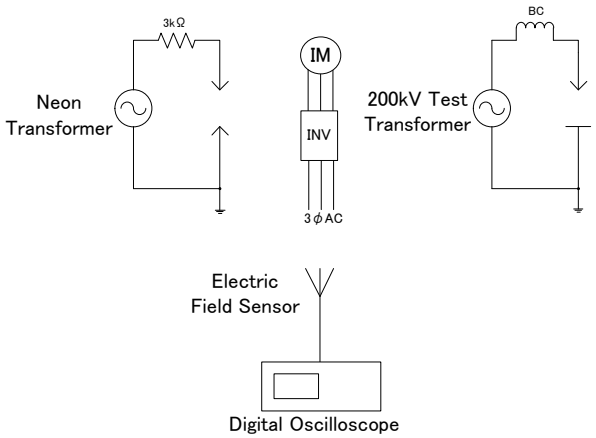

Figure 4: Experimental setup for three different kinds of pulses

EXAMPLES OF WAVELET ANALYSIS

Figure 5 shows an example of PD signals obtained by the PD measuring system shown in figure 3. The signal is detected by high frequency CT (CH1) and loop antenna without shield. It is clear that the loop antenna can detect many PD pulses. On the other hand, the output signal of high-frequency CT is interfered by external noises as shown in upper waveform of figure 5.

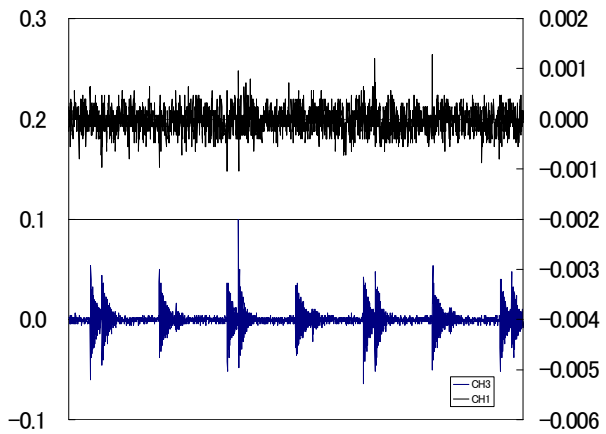

Upper: High-frequency CT
Lower: Loop antenna

Figure 5: Comparison of output voltage of high-frequency CT and loop antenna for the same PD pulses

Figure 6 shows the wavelet analysis using Gaussian derivative (7) for the waveform obtained by high-frequency CT shown in upper side signal of figure 5. It is clear that PD pulses are detected by wavelet analysis together with the high SN ratio.

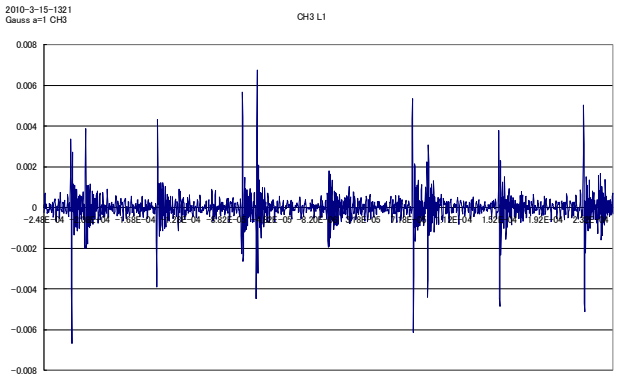

Figure 6: PD signals detected by Wavelet analysis using Gaussian derivative in noisy signal (scale parameter *a*=1)

Figure 7 shows the wavelet analysis using the Weibull distribution function given by equation (8). The detected points of sharp pulses in figures 6 and 7 agree well with the PD pulses detected by loop antenna as shown in figure 5.

From those results, we can see that wavelet analysis using the odd function has high potential to detect the PD signals. The wavelet analysis using the impulse function (9) gave the same result described in reference (3).

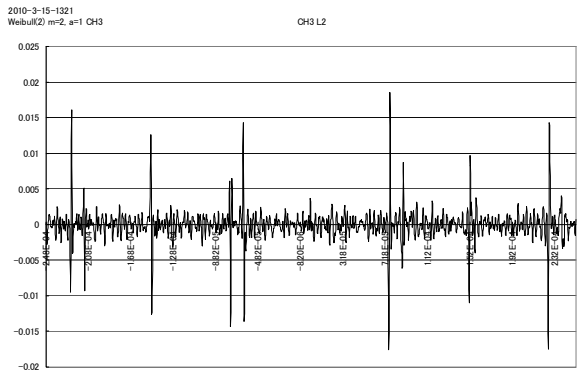

Figure 7: PD signals detected by Wavelet analysis using Weibull distribution function in noisy signal (m=2, a=1)

Figure 8 shows the original waveform and its FFT spectrum obtained by electric field sensor as shown in figre 4. The sampling rate is 100MS/s. It can be seen that there are large three pulses and several smaller ones, however those are not distiguished from the FFT spectrum.

Figure 9 shows the continuous wavelet analysis using by Mexican hat wavelet. We can see that

there are large three signals and several smaller ones in this figure.

Figure 10 shows the discreate wavelet analysis by Meyer wavelet. This figure indicates that there are five kinds of pulses having different frequency spectrums as enclosed with a rectangle. Those are corresspond to pulse sources such as positive corona, negative corona, inverter surges and so on.

These results lead us to the conclusion that wavelet analysis can distingush between the PD pulses and external noises.

Figure 11 is the output voltage obtained by the loop antenna. Sampling rate is 25MS/s. It is very difficult to recognize the PD signal and noises in this figure.

Figure 12 shows the wavelet tree and wavelet analysis based on the multi rate filter bank using by Meyer wavelet. We can see that there are different types of pulses; namely high frequency pulsate ones shown in the wavelet tree “d1” or “d2”, and oscillatory one shown in the wavelet tree “d3”.

Figure 13 shows the high frequency component s excluded low frequency component by digital filtering. This figure shows that those higher components appear periodically. Thus we can conclude that those signal are originated by inverter noise, and oscillatory one seems to be PD signal.

DISCUSSION

The signal processing in PD measurement is important to construct the automatic PD diagnosis system. In an actual field, there are many noise sources. The main component of the higher frequency band is the electric wave caused by broadcasting or telecommunication system. In addition to this, inverter noise has high energy spectrum.

It is well known that the scale parameter “a” is large; the wavelet characterizes a low-pass filter. On the other hand, a higher-frequency component can be detected by selecting a scale parameter as small as possible. Therefore we can eliminate the known waveform or frequency component from the original signal by wavelet analysis known as the digital filter.

Another problem is the detection characteristics of the sensor itself. Figures 5 shows an example of PD signals. PD signal is detected by high frequency CT (CH1) and loop antenna without shield (CH2), respectively. From this figure, we can see that the signal output varies with the detection sensors. This means that the construction of signal processing system depends on not only the external noise but also the PD sensing and transmission system. In other words, construction of database of wavelet parameter for each field is very important to obtain high-reliable data.

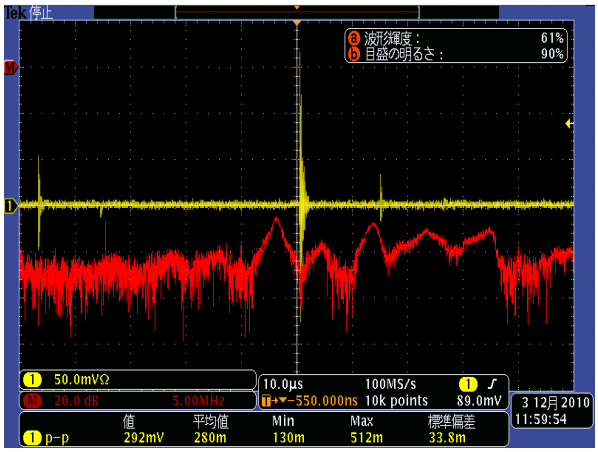

Figure 8: Original waveform and its FFT spectrum obtained by electric field sensor

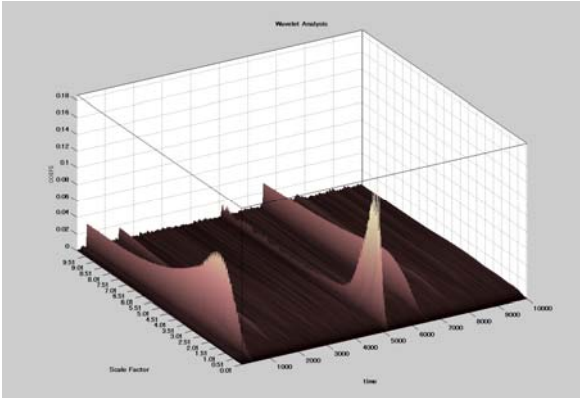

Figure 9: Continuous Wavelet Analysis using by Mexican hat wavelet

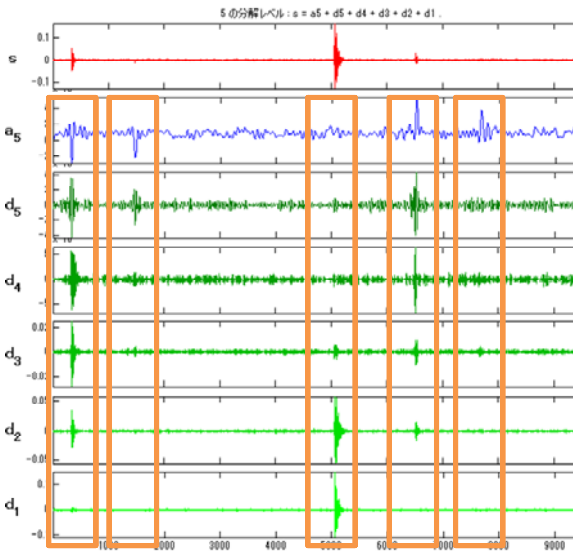

Figure 10: Discreate Wavelet Analysis by Meyer wavelet

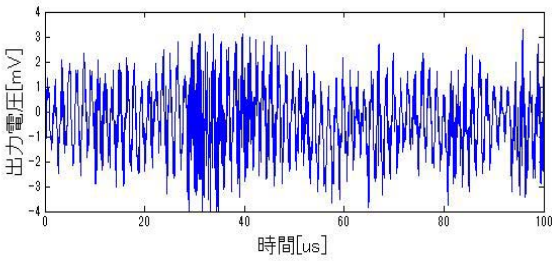

Figure 11: Loop antenna output voltage

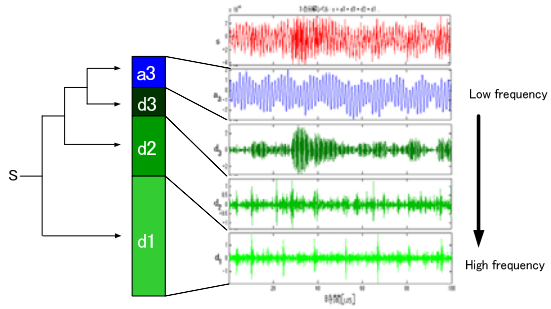

Figure 12: Wavelet tree and wavelet analysis

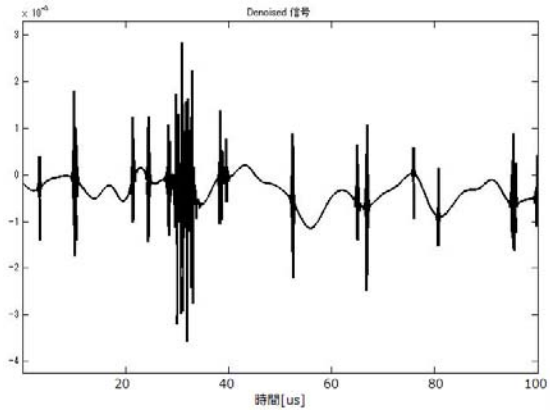

Figure 13: Periodical pulses detected by digital filtering

CONCLUSION

Wavelet analysis is useful for PD detection. The paper concluded as follows;

(1) The wavelet analysis based on the experimental data clearly shows that an odd function such as Gaussian derivative function, Weibull distribution function and impulse wave are strongly related to the PD pulse waveform. Thus the odd function can be applied to the mother wavelet.

(2) In the wavelet analysis, the digital filtering based on the multi rate filter bank is important from the external noise elimination.

(3) The construction of database related on the wavelet parameters is also important to diagnose the power equipment in the noisily field.

REFERENCES

[1] Masayuki Hikita, Shinya Ohtsuka, Satoshi Matsumoto, “Recent Trend of the Partial Discharge Measurement Technique using the UHF Electromagnetic Wave Detection Method,” Transaction on Electrical and Electronic Engineering, IEE of Japan Trans., vol.2, pp.504-509, 2007.

[2] Satoshi Matsumoto, Nobuaki Nishimura, Nobutaka Inaba, Ryuichi Ogura, ‘Detection of Similarity for Correlation in Partial Discharge Signals using Wavelet Analysis’, Proceeding of the 2010 International Conference on Condition Monitoring and Diagnosis, No.A3-3, pp.89-92 (2010)

[3] Satoshi Matsumoto, Yoshikazu Shibuya, Ryuich Ogura, Nobuaki Nishimura, Yuko Yamazaki and Kiyoshi Umezu “Wavelet Analysis using odd functions for Partial Discharge Signals” The 7th International Workshop on High Voltage Engineering 2010, IEE Japan, IWHV2010, ED-10-083, SP-10-050, HV-10-045, pp.105-108, Nov. 2010

[4] Ryuichi Ogura, Yusuke Okada, Satoshi Matsumoto, Keisuke Etoh, and Tetsuo Seino, “Basic study of on-site PD diagnosis system using wavelet analysis”, IEEJ The Papers of Joint Technical Meeting on Dielectrics and Electrical Insulation and Electric Wire and Power Cable, DEI-11-40, EWC-11-4, pp.19-24 (2011-2) (in Japanese)